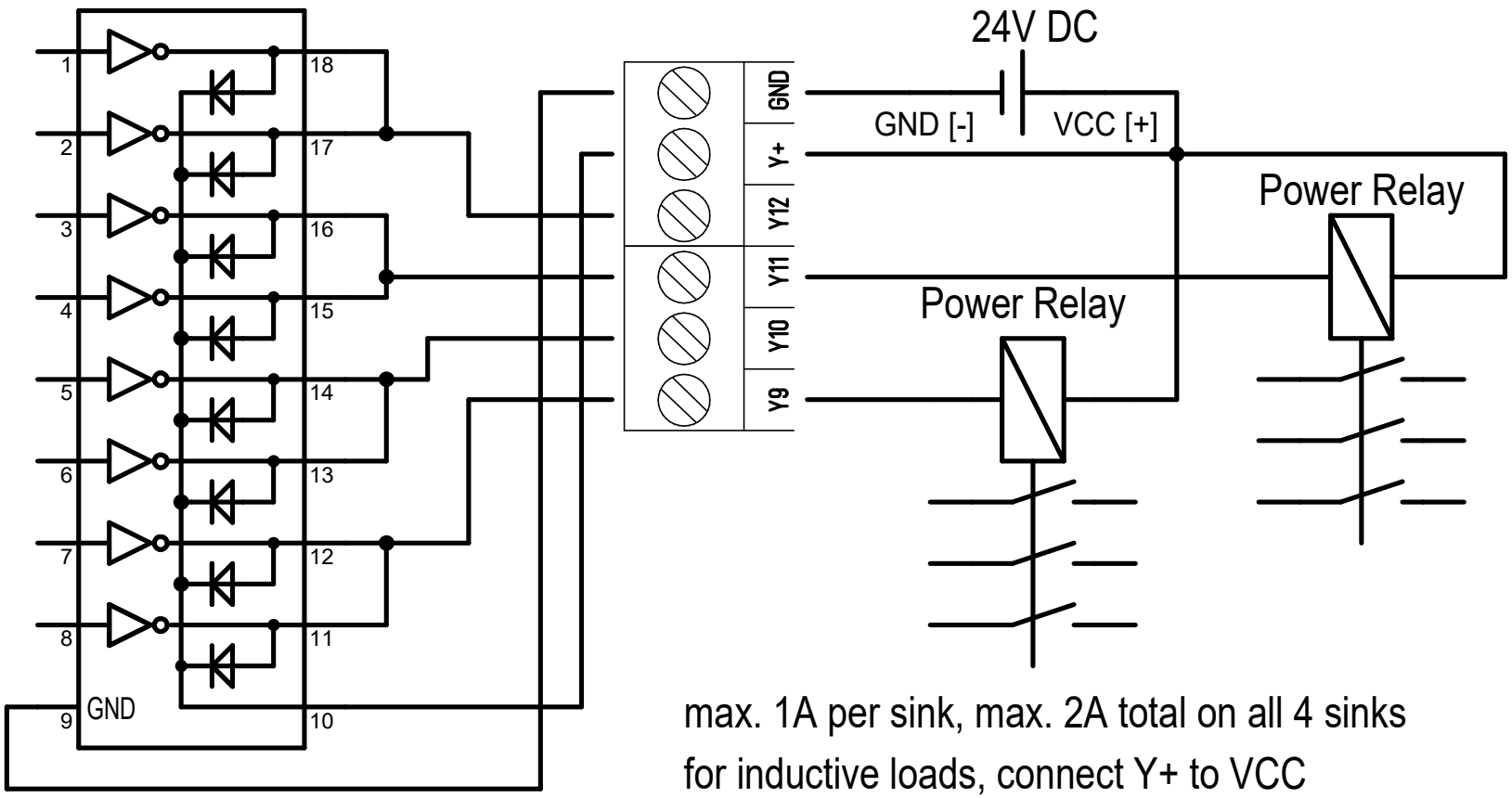

max. 1A per sink, max. 2A total on all 4 sinks
for inductive loads, connect Y+ to VCC